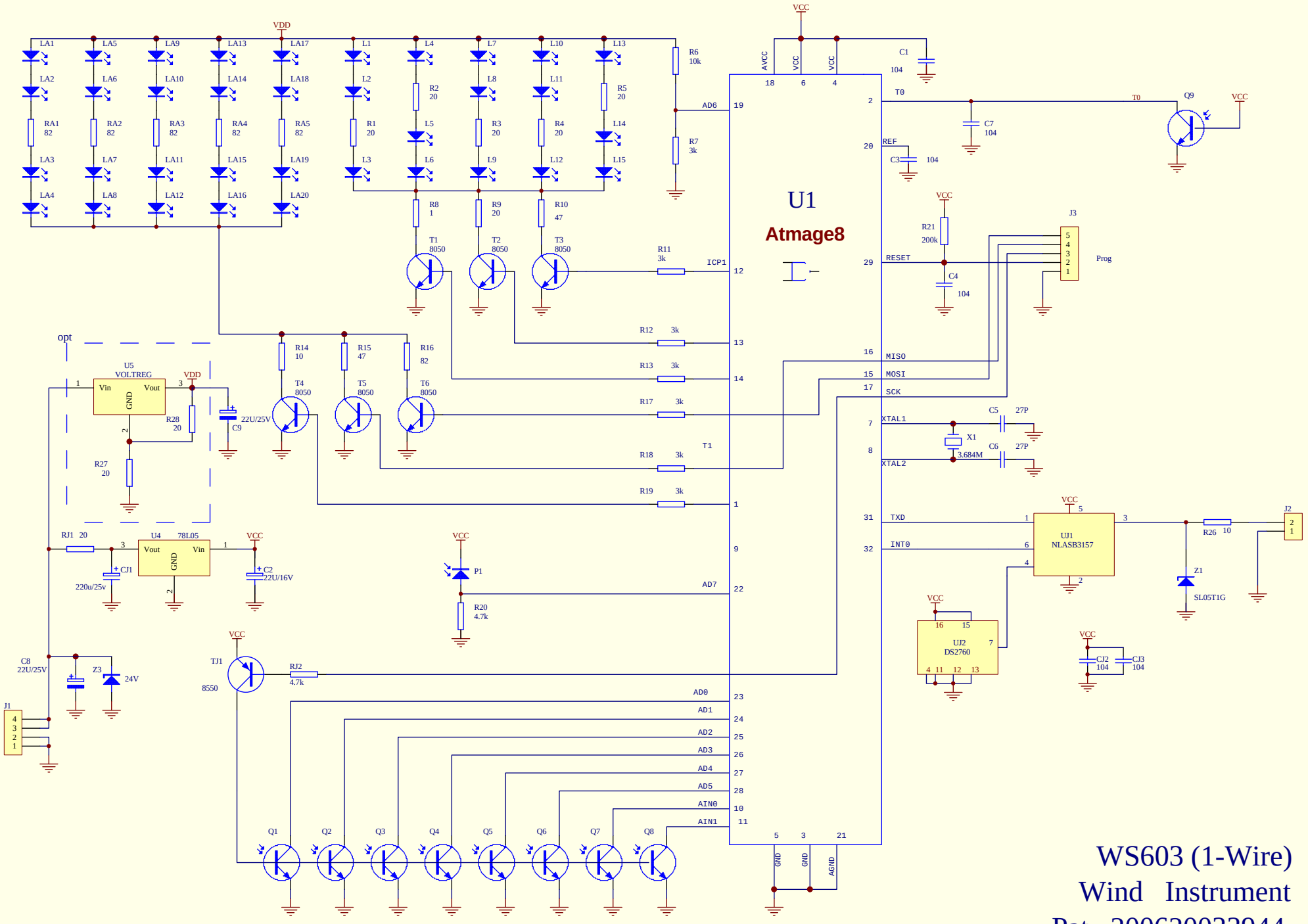

WS603 (1-Wire)
Wind Instrument
Pat. 200620033944